Cut 20 form boards with inside measurement of 92 5/8". Lay them out and strap them as you go. Each end is 9°. Layout extensions

Pour piers and slab first with rebar running through the form boards where the extension(s) will be.

We prefer piers when positioned at every vertice. 12" to 16" dia., as deep as you can go. Engineering fact - piers hold better!

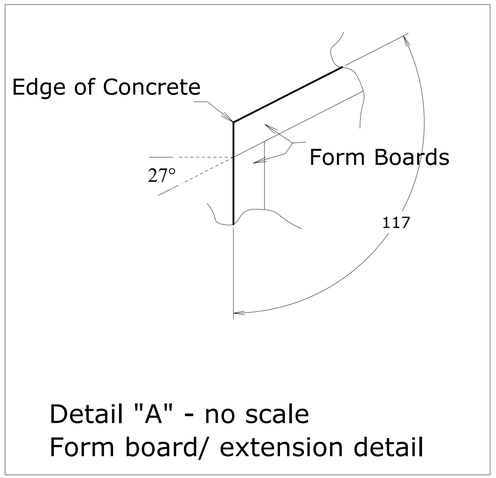

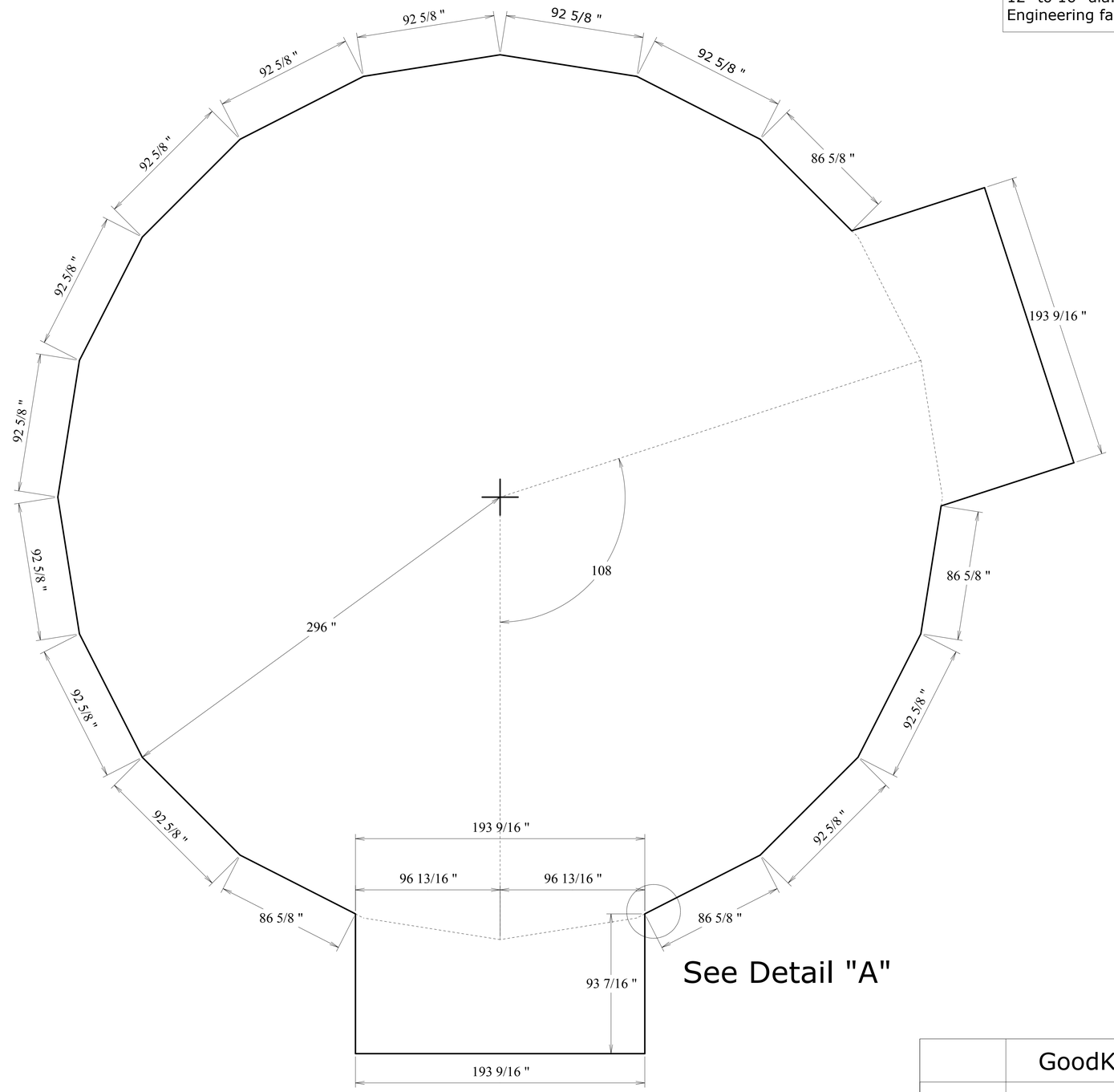

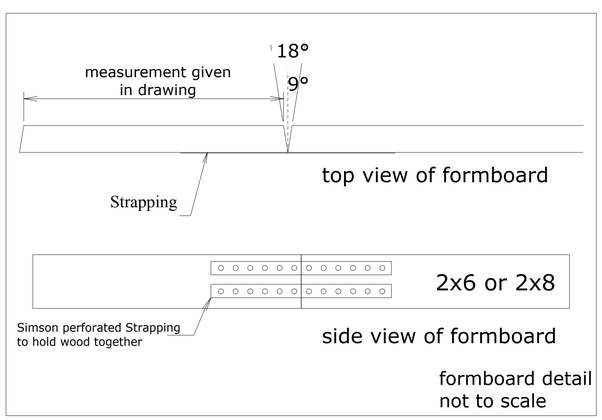

	GoodKarmaDomes.com	Date: 10/01/06
	49ft-4in dome 2x6 framing 3/4" decking	Drawn By: T. Swaim